ENGINE, CYLINDER HEAD - Z26S4D92AN/AH/BN/BH (C750274)

2026 RZR - RZR PRO S4 ULTIMATE (R01) - Z26S4D92AN/AH/BN/BH

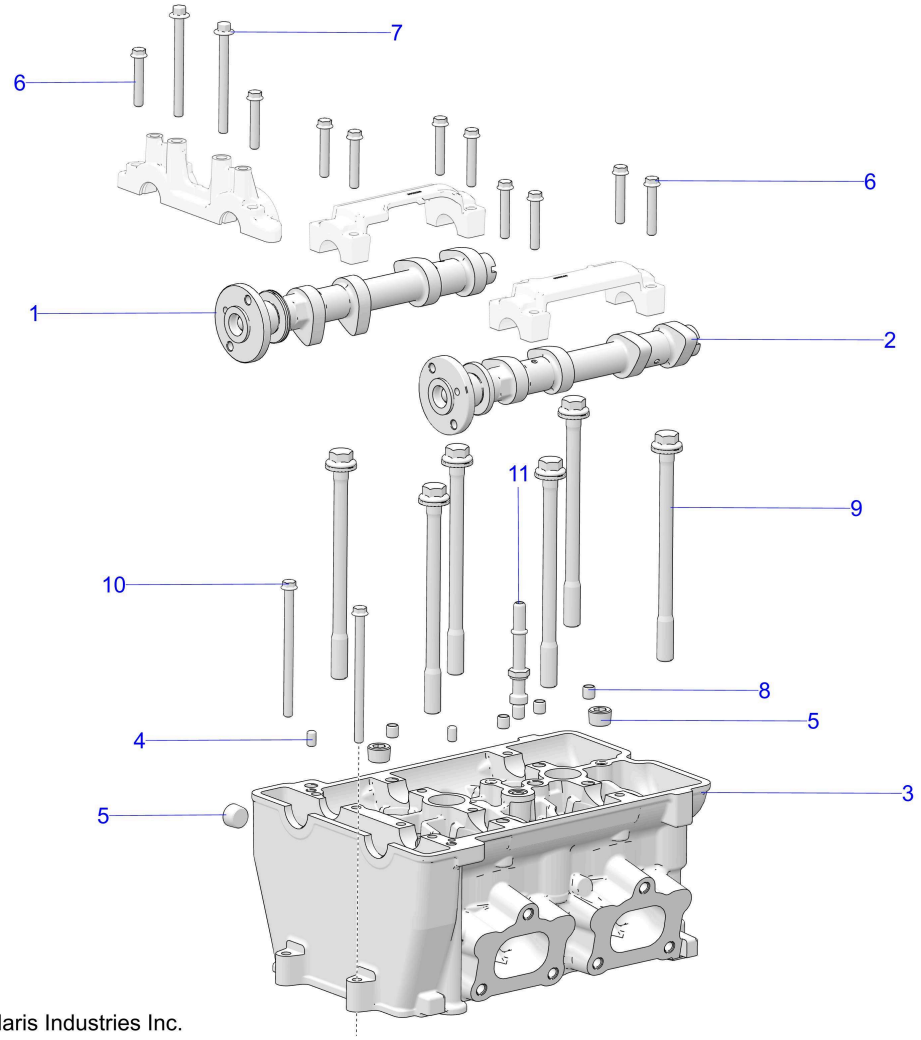

© 2023 Polaris Industries Inc.

C750274

Reference #	*Part#*	*Description*	*Quantity*
1	3023842	ASM-CAMSHAFT,INT,1040-234	1
2	3023843	ASM-CAMSHAFT,EXH,1010-230	1
3	3023564	ASM-CYLINDER HEAD [INCL. 4-8]	1
4	5132835	PIN-DOWEL,M6X10	2
5	7052413	PLUG-3/8 NPT,HX/SOC W/SEALANT	3
6	7520689	SCR-HXFL-M6X1.0X35 10.9 ZY3	10
7	7520688	SCR-HXFL M6X1.0X70 B18.2.3.4M	2
8	7662387	DWL-HOL,M8X8,SS	4
9	7520978	SCR-HXFL,M11X1.25X150 10.9 SEM	6
10	7519153	SCR-HXFLG,M6X1.0X90	2
11	7055624	FITTING-BLEED	1

Copyright 1996-2026 Polaris Industries U.S.A All rights reserved.